# Technical data sheet

## Junction box A 8

## Item no. 2000059

Protection rating IP55, rated voltage 400 V, nominal cross-section 2.5 ÷ mm², 7 entries for cable diameters of 5–14 mm.
Clamshell.
Dimensions: 75 x 75 x 36.2 mm
Clear internal dimensions: 65 x 65 x 32 mm
1 cut-out tool for every 10 boxes

PE Polyethylene

## Master data

| | |
|---|---|
| Item no. | 2000059 |
| Type | A 8 HF RO |
| Description 1 | Junction box |
| Dimension | 75x75x36 |
| Colour | Red |
| Material | Polyethylene |
| Material symbol | PE |
| Smallest sales unit (VG) | 10 Piece |
| Weight | 5,14 kg/100 pc. |

## Technical data

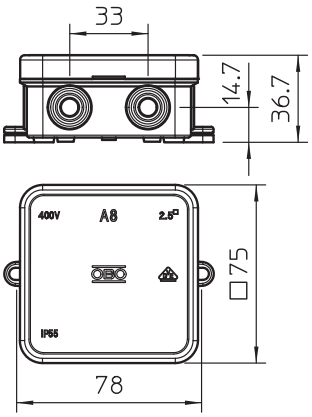


| | |
|---|---|
| Length | 75,00 mm |
| Width | 75,00 mm |
| Height | 36,70 mm |
| Clear internal dimensions | 65x65x32 mm |
| Dimension LxWxH | 75x75x36,7 mm |
| Dimension | 75 x 75 x 36,2 mm |
| Expandable | □ |
| No. of entries | 7 |
| Type of entry | Cable |
| Type of entry | Cable |
| Type of housing penetration | Pre-marking |
| Measured insulation voltage Vi | 660,00 V |
| Equipment | Without |
| Cover | Not transparent |
| Cover fastening | Locking |
| Entries | 7 entries for cable diameter 5–14 mm |
| Entry from rear | □ |
| Explosion-tested version | □ |
| Flame-resistant | acc. to VDE 0471/DIN 695 Part 2-1, test temperature 650°C |
| Shape | Square |
| Function maintenance (ETIM) | Without |
| For Ex zone | Without |
| For Ex zone gas | Without |
| For Ex zone dust | Without |

# Technical data sheet

## Junction box A 8

## Item no. 2000059

### Technical data

| | |
|---|---|
| Halogen-free | ☑ |
| Max. conductor cross-section | 2,50 mm² |
| With screening | ☐ |
| With cover | ☑ |
| Installation type | Wall/ceiling mounting |
| Mounting type | Wall/ceiling mounting |
| Nominal cross section | 2,50 mm² |
| Nominal voltage | 690,00 V |
| Protection rating | IP55 |
| Sealable | ☐ |
| max. permitted ambient temperature | -5,00 - 45,00 °C |
| Transparent lid | ☐ |
| Weatherproof | ☐ |