Technical data sheet

GESR9 service outlet with locking slider

Item number: 7405465

Service outlet with locking slider for up to 12 individual Modul 45 devices in 3 UT4 universal supports, use in duct and trunking systems and system floors.

5 mm floor covering recess in the hinged cover, if necessary, adjustable to 3, 10 or 12 mm.
Up to 9 installation devices with 50 mm central plate can be inserted.

Service outlet with locking slider, 3-compartment, for the installation of MT9 mounting support. Three type APMT5 cover plates can be installed.

Floor covering recess in the hinged cover pre-adjusted to 5 mm, if necessary adjustable to 3, 10 or 12 mm.

PA Polyamide

Master data

Item number	7405465
Type	GESR9-2U12T 7011
Description 1	Service outlet
Description 2	for universal mounting
Manufacturer	OBO
Dimension	Ø324x68
Colour	Iron grey; RAL 7011
Material	Polyamide
Smallest sales unit	1
Unit of quantity	Piece
Weight	244 kg
Weight unit	kg/100 pc.
CO2 Footprint (GWP) Cradle-to-Gate	8,1783 kg CO2e / 1 Piece

Technical data sheet

GESR9 service outlet with locking slider

Item number: 7405465

Dimensions

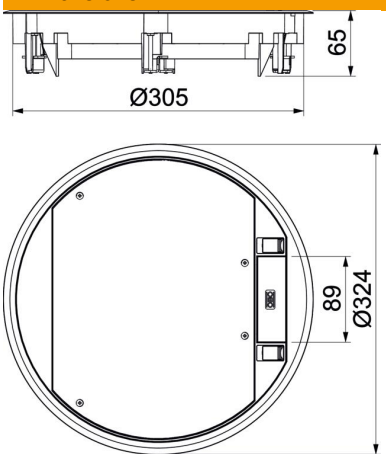

Technical data

Number of installable devices	12
Number of mounting boxes	3
Version for	Round
Cable outlet version	Swivellable cord outlet
Floor covering protection frame	yes
Floor care	Dry
Seal installation option	no
Floor height, min.	72 mm
Suitable for raised floor installation	yes
Suitable for screed-flush closed underfloor ducts	yes
Suitable for screed-covered underfloor ducts	yes
Suitable for cavity floor installation	yes
Suitable for wet care	no
Suitable for underfloor box	350
Suitable for underfloor ducts	yes
Device support to accept mounting boxes	yes
With floor covering recess	yes
Nominal size for device installation units	R9
Frame version	Carpet protection frame
Protection rating (IP) when used	IP20
Protection rating (IP) when unused	IP40
Protection rating IK code	IK08
Heavy-duty version	no
Clamping range D, max.	75 mm
Clamping range D, min.	8 mm
Installation system type	UT4
Vertical load, large area	to 5,000 N
Vertical load, small area	to 3,000 N

Technical data sheet

GESR9 service outlet with locking slider

Item number: 7405465

Technical data

Approvals	VDE
Opening mechanism	Locking slider
Floor covering thickness	5 mm
Floor covering thickness max.	12 mm