Technical data sheet

Parallel clamp for connecting reinforced steels

Item number: 5315557

- For connecting reinforced steels Ø 10−20 mm
- Mounted with M10 x 40 bolts

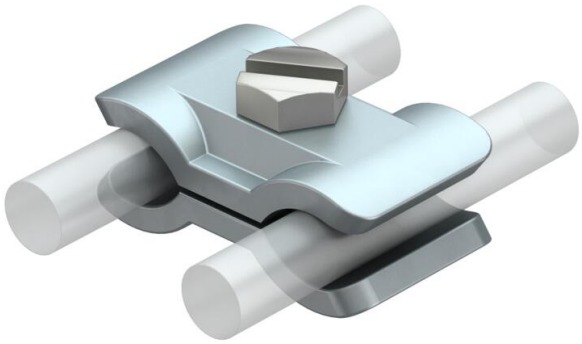

St Steel

Master data

Item number	5315557
Type	259 A ST
Description 1	Parallel clamp
Manufacturer	OBO
Dimension	10-20mm
Material	Steel
Smallest sales unit	25
Unit of quantity	Piece
Weight	18.8 kg
Weight unit	kg/100 pc.
CO2 Footprint (GWP) Cradle-to-Gate	0,4438 kg CO2e / 1 Piece

Technical data sheet

Parallel clamp for connecting reinforced steels

Item number: 5315557

Dimensions

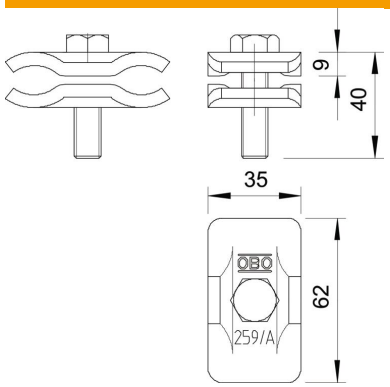

Dimension A	35 mm
Dimension B	62 mm

Technical data

Type of fastening screw	Hexagonal bolt
Type of connector	Parallel connector
Lightning current carrying capacity	H/100 kA
Suitable for connection	Miscellaneous
Fit	Ø 10-20 mm
ROHS-conformant	yes
Intermediate plate	no