Technical data sheet

Electrogalvanised steel sleeve, without thread

Item number: 2046858

Accessory part: plug-in sleeve for the connections between electrical installation pipes. With burr-free inner wall.

E30 E90

St Steel

G Electrogalvanized

Master data

Item number	2046858
Type	SV40W G
Description 1	Conduit plug-in coupler
Description 2	without thread
Manufacturer	OBO
Dimension	Ø40mm
Material	Steel
Surface	Electrogalvanized
Surface standard	EN ISO 19598 / EN ISO 4042
Smallest sales unit	25
Unit of quantity	Piece
Weight	13.2 kg
Weight unit	kg/100 pc.
CO2 Footprint (GWP) Cradle-to-Gate	0,2774 kg CO2e / 1 Piece

Technical data sheet

Electrogalvanised steel sleeve, without thread

Item number: 2046858

Dimensions

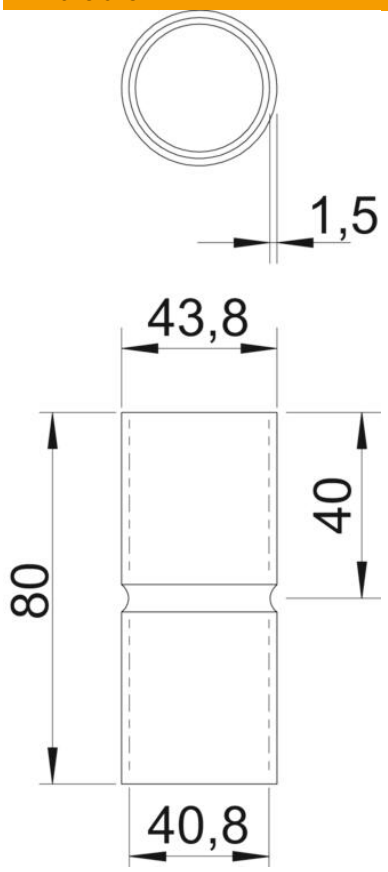

Length	80 mm
Dimension D	43.8 mm
Dimension d	43.8 mm
Dimension L	80 mm
Dimension l	40 mm
Dimension m (mm)	M40
Dimension t	1.5 mm

Technical data

Version for	Connector
for pipe diameter	40 mm
Size	40
Halogen-free	yes
With inspection opening and lid	no
Brushed surface	no
Polished surface	no
Permitted temperature range, max.	400 °C
Permitted temperature range, min.	-45 °C
Two-part	no