Technical data sheet

Clamp clip, single, A4 metal pressure trough

Item number: 1158223

Suitable for all C profile rails with slot width 18 mm and 22 mm.

U 18 22

A4 Stainless steel

2B Bright, treated

Master data

Item number	1158223
Type	2056U M 34 A4
Description 1	Clamp clip
Description 2	with metal pressure sump
Manufacturer	OBO
Dimension	28-34mm
Material	Stainless steel 1.4571
Surface Surface standard	Bright, treated
Smallest sales unit	100
Unit of quantity	Piece
Weight	6.656 kg
Weight unit	kg/100 pc.
CO2 Footprint (GWP) Cradle-to-Gate	0,3952 kg COe / 1 Piece

Technical data sheet

Clamp clip, single, A4 metal pressure trough

Item number: 1158223

Dimensions

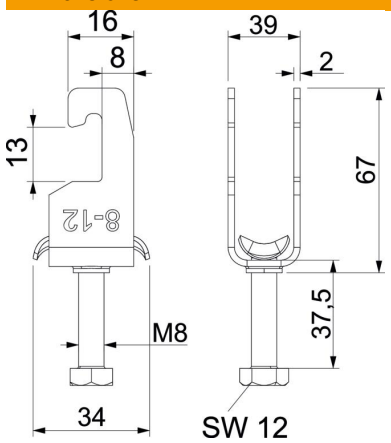

Dimension B	39 mm
Dimension C	34 mm
Dimension G (mm)	M8
Dimension H	69 mm
Dimension L	28 mm
Dimension t	2 mm

Technical data

Number of cables/pipes	1
For pipe diameter, max.	32 mm
For pipe diameter, min.	32 mm
for rail with slot width (with interval), max.	22 mm
for rail with slot width (with interval), min.	18 mm
Halogen-free	no
Max. Tightening torque	5 Nm
With plastic trough	no
With metal trough	yes
Mounting type	Profile rail
Impact-resistant	no
Clamping range D, max.	34 mm
Clamping range D, min.	28 mm
Surface addition	Untreated
Material addition	Rustproof steel
With counter-trough	no
Material of trough	Rustproof steel
Material quality of trough	Other