Technical data sheet

Clamp clip, single, FT metal pressure trough

Item number: 1158120

Suitable for all C profile rails with slot width 18 mm and 22 mm.

U 18 22 E30 E90

St Steel

FT Hot-dip galvanised

Master data

Item number	1158120
Type	2056U M 76 FT
Description 1	Clamp clip
Description 2	with metal pressure sump
Manufacturer	OBO
Dimension	70-76mm
Material	Steel
Surface	Hot-dip galvanised
Surface standard	DIN EN ISO 1461
Smallest sales unit	25
Unit of quantity	Piece
Weight	20.6 kg
Weight unit	kg/100 pc.
CO2 Footprint (GWP) Cradle-to-Gate	0,4311 kg COe / 1 Piece

Technical data sheet

Clamp clip, single, FT metal pressure trough

Item number: 1158120

Dimensions

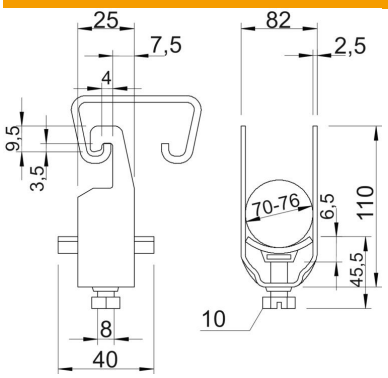

Dimension A	25 mm
Dimension B	82 mm
Dimension C	40 mm
Dimension G (mm)	M8
Dimension H	110 mm
Dimension L	45.5 mm
Dimension t	2.5 mm
Dimension x	6.5 mm

Technical data

Number of cables/pipes	1
for rail with slot width (with interval), max.	22 mm
for rail with slot width (with interval), min.	18 mm
Halogen-free	no
Max. Tightening torque	5 Nm
With plastic trough	no
With metal trough	yes
Mounting type	Profile rail
Impact-resistant	no
Clamping range D, max.	76 mm
Clamping range D, min.	70 mm
Surface addition	hot galvanised
Material addition	Steel
With counter-trough	no
Material of trough	Steel